Dart Aerospace Ltd.

Date: Tuesday, 5/23/2006 8:08:04 AM
User: Kim Johnston

Process Sheet

Customer	: CU-DAR001 Dart Helicopters Services	**Drawing Name**	: CLAMP
Job Number	: 27080		
Estimate Number	: 10267		
P.O. Number	: N/A	**Part Number**	: D2438
This Issue	: 5/23/2006 **S.O. No.** : N/A	**Drawing Number**	: D2438 REV. C
Prsht Rev.	: NC	**Project Number**	: N/A
First Issue	: N/A **Type** : PURCHASED PARTS	**Drawing Revision**	: C
Previous Run	: 25611	**Material**	: N/A
Written By	: SEE COMMENT BELOW	**Due Date**	: 5/30/2006 **Qty:** 200 **Um:** Each
Checked & Approved By	: KJ 06.05.23		
Comment	: Est: E 05.06.28 Bending removed KJ/JLM		

Additional Product

Job Number:

Seq. #:	Machine Or Operation:	Description :
1.0	PG	PURCHASING

Comment: PURCHASING
Issue P/O: 1313
Laser cut as per Dwg D2438
Material release note is required
CL06/05/24 (200)

2.0	D2438B	Clamp

Comment: Qty.: 1.0000 Each(s)/Unit Total : 200.0000 Each(s)
CLAMP

3.0	PACKAGING 1	PACKAGING RESOURCE #1

Comment: PACKAGING RESOURCE #1
Recieive & Inspect for Transit Damage
Ensure Material Release Note is attached
AS 06/06/16 (199)

4.0	QC6	DIMENSIONAL CHECK

Comment: DIMENSIONAL CHECK
Inspect dimensions as per Dwg D2438
(6.786" center to center)
06.06.22 QSP019 (199)

5.0	SMALL FAB 1	SMALL & MEDIUM FAB RESOURCE 1

Comment: SMALL & MEDIUM FAB RESOURCE 1
Tumble ~~& Deburr any rough edges~~
FF 06-06-27 199
deburr holes

Form: rprocess

Dart Aerospace Ltd

W/O:		WORK ORDER CHANGES					
DATE	STEP	PROCEDURE CHANGE	By	Date	Qty	Approval Mfg / Design Mgr	Approval QC Inspector

NCR:		WORK ORDER NON-CONFORMANCE (NCR)						
DATE	STEP	Description of NC Section A	Corrective Action Section B			Verification Section C	Approval Design Mgr	Approval QC Inspector
			Initial Design Mgr	Action Description Design Mgr	Sign & Date			

Part No: _____ **PAR #:** _____ **Fault Category:** _____ **NCR:** Yes No **DQA:** _____ **Date:** _____

NOTE: Date & initial all entries **QA: N/C Closed:** _____ **Date:** _____

H:\forms\Quality Assurance\approved forms\NCRWO revC

Date: Tuesday, 5/23/2006 8:08:04 AM
User: Kim Johnston

Process Sheet

Customer: CU-DAR001 Dart Helicopters Services
Drawing Name: CLAMP

Job Number: 27080
Part Number: D2438

Job Number:

Seq. #:	Machine Or Operation:	Description :
6.0	QC5	INSPECT WORK TO CURRENT STEP
	Comment: INSPECT WORK TO CURRENT STEP	
7.0	PACKAGING 1	PACKAGING RESOURCE #1
	Comment: PACKAGING RESOURCE #1 Identify and Stock Location: ST178	
8.0	DC	DOCUMENT CONTROL
	Comment: DOCUMENT CONTROL Inspection Level 21	

06.06.27 199

06/6/27 199

199

06/06/27

06.06.27

Job Completion

Form: rprocess

Dart Aerospace Ltd

W/O:		WORK ORDER CHANGES					
DATE	STEP	PROCEDURE CHANGE	By	Date	Qty	Approval Mfg / Design Mgr	Approval QC Inspector

NCR:		WORK ORDER NON-CONFORMANCE (NCR)						
DATE	STEP	Description of NC Section A	Corrective Action Section B			Verification Section C	Approval Design Mgr	Approval QC Inspector
			Initial Design Mgr	Action Description Design Mgr	Sign & Date			

Part No: _____ **PAR #:** _____ **Fault Category:** _____ **NCR:** Yes No **DQA:** _____ **Date:** _____

NOTE: Date & initial all entries **QA: N/C Closed:** _____ **Date:** _____

H:\forms\Quality Assurance\approved forms\NCRWO revC

DESIGN	DRAWN BY	DART AEROSPACE LTD HAWKESBURY, ONTARIO, CANADA	
KE	KE		
CHECKED	APPROVED	DRAWING NO.	REV. C
		D2438	SHEET 1 OF 1
DATE		TITLE	SCALE
98.05.12		CLAMP	1:1

A	96.01.24	NEW ISSUE
B	96.05.13	CHANGE LENGTH
C	98.05.12	R1.64 WAS R1.438, CHANGE GEOMETRY

RELEASED 98.06.17 KE

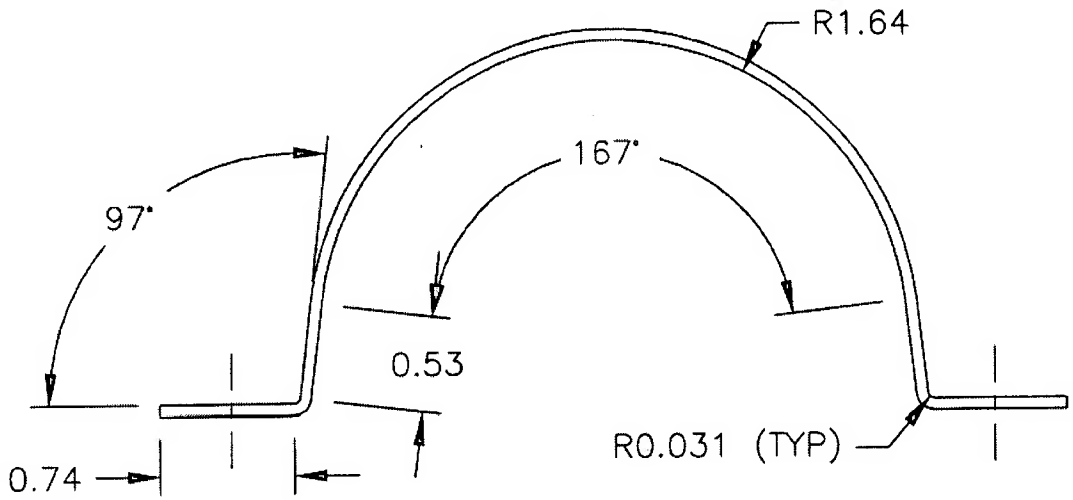

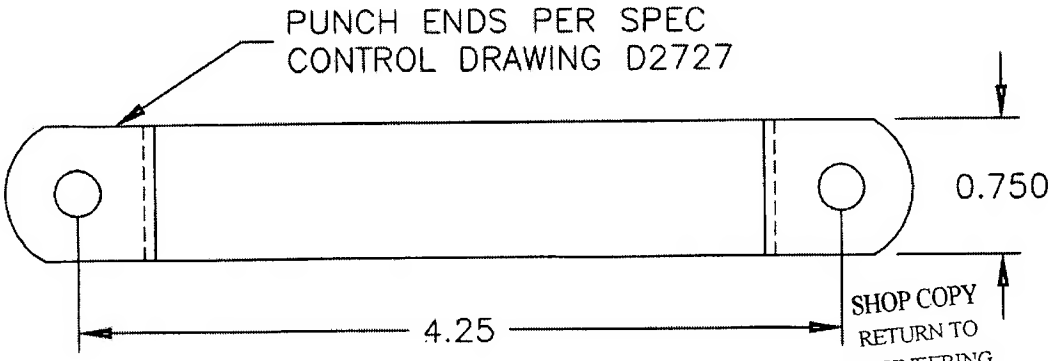

SHOP COPY
RETURN TO
ENGINEERING
UNCONTROLLED COPY
SUBJECT TO AMENDMENT
WITHOUT NOTICE
WORK ORDER
NO. 27080

FLAT LENGTH: 7.586 END–END
6.786 HOLE–HOLE

MATERIAL: AISI 304/316 SS 0.063 THICK

MINIMUM REQUIREMENT IS ANNEALED CONDITION

00.06.06
CP 00.06.07

CERTIFICATE OF COMPLIANCE
CERTIFICAT DE CONFORMITE

GFI
Membre de / A Member of Thomas&Betts

180 LABROSSE AVENUE
POINTE CLAIRE, QC
H9R 1A1

DART AEROSPACE LTD
1270 ABERDEEN ST.
HAWKESBURY, ON K6A 1K7

CERTIFICATE NO. 6 OUR JOB NO J0143868 SHIPPING MEMO 0339244

ITEM	QUANTITY	PURCHASE ORDER	PART NUMBER	REV	NAME	DWG ISSUE
--	200 PCS	PO00001313	D2438B	C	CLAMP	C

MATERIAL	SUPPLIED BY	MAT. REL. NO.
S.S.T 304	SAMUEL SPECIALTY	P.O # 0069278 ATT'D

	PROCESS	PROCESSOR	RELEASE NOTE #
1	FIRST ARTICLE INSPECTION REPORT ON FILE	GFI	CONFORMS
2			
3			
4			
5			
6			
7			
8			
9			

WE HEREBY CERTIFY ALL THE PARTS COVERED BY THIS CERTIFICATE HAVE BEEN MANUFACTURED FROM MATERIAL SUPPLIED ON RELEASE NOTE SHOWN ABOVE AND THAT ALL PARTS HAVE BEEN INDIVIDUALLY INSPECTED AND CONFORM TO THE DRAWINGS AND PURCHASE ORDER REFERENCED ABOVE.

DATE 14 JUNE 2006

G.F.I. Q.C. REP. B Sonnée

GFI 5 CONTRÔLE DE QUALITÉ

LES METAUX SPECIALISES SAMUEL
21525 CLARK-GRAHAM
BAIE D'UREE, QUEBEC, CANADA
H9X 3T5
(514) 457-3399 FAX(514) 457-9393

N° 0005

PAGE 2 DE/OF 2

PORTEUR/CARRIER NAME	CAMION/TRUCK TRAILER	NOM DE LA BRANCHE/SALES BRANCH NAME	DATE D'EXP/DATE OF SHIPPE
GIEPO TRANSPORT -	100	LES METAUX SPECIALISES SAMUE	5/16/0

VENDU À/SOLD TO:

GFI DIVISION OF THOMAS & BETTS,LIMITED
180 AVENUE LABROSSE
POINTE CLAIRE
QC
H9R 1A1 (514)630-4877

EXPÉDIÉ A/SHIP TO: TÀB: DEST

G.F.I. INC
180 AVENUE LABROSSE

POINTE CLAIRE
QC
H9R 1A1 XQ (210678-00001)

COMMANDE Nº ITEM

DESCRIPTION ET POIDS/DESCRIPTION AND WEIGHT

55239-04 #Comm du client: 0069270, 73;78,84 Cert/Test: TRUCK 221 LVR

15 MOX FEUILLES ALUMINIUM 5052H32
.0320"x48"x96"
P.O. 0069284

AS03248X96KM

Description #étiq mln	Art #À soul	Pd ca	Qté	#étiq Étq princ	Cd vendeur #Coul
	3	96.000	44	1288295	028
5600210				0021449	415395
	9	288.000	133	1288296	028
5650400				0322510	440912
	3	96.000	44	1288396	028
5650400				0322510	440912
Total:	15	480.000	221		

55239-06 #Comm du client: 0069270, 73;78,84 Cert/Test: TRUCK 397 LVR

5 MOX FEUILLE INOXYDABLE 304 2B
.0600"x48"x96"
P.O. 0069278

TS06248X9642

Description #étiq mln	Art #À soul	Pd ca	Qté	#étiq Étq princ	Cd vendeur #Coul
	5	160.000	397	1288299	087
N8774				P378315	002680
Total:	5	160.000	397		

Poids total: 2442 LVR
#Total paquets: 6

GFI INC.

LE MATÉRIEL REÇU NE SERA ACCEPTÉ QU'APRÈS VÉRIFICATION DE DIMENSIONS, ÉPAISSEUR, POIDS ET CONDITIONS.

SIGNATURE _____ DATE 16 MAY 06

PORT PAYÉ/PREPAID	PORT DÛ/COLLECT	INST. VOITURIER/DRIVER INSTRUCTIONS	VALEUR ($2.00/lb max.à moins d'avis contraire) VALUATION (Max $ 2.00/lb unless otherwise stated) VALEUR DÉCLARÉE DE L'EXPÉDITION DECLARED VALUE OF SHIPMENT
EXPÉDITEUR/DISPATCHER		VOITURIER/DRIVER	REÇU PAR/RECEIVED BY

Ship.B/L. M/F 01/0